February 28, 1968

P. B. Akin	W. Kunes	J. Jackson	L. Hazelip
R. W. Richards	F. Hacke	E. G. Johnson	R. Wedler
H. R. Kilpatrick	J. Guyer (2)	T. Collins	G. Vaughan
R. B. Dennis	J. Korilko	E. Jaschek	H. Kamper
A. C. Weber	A. H. Becker	J. McCammon	J. Paul
E. L. Bockstruck	H. Meyer	W. Davis	L. Troeckler
W. A. Peters	M. Hardaway	R. Uhrig (2)	R. Meckfessel
H. E. Hillmer	C. Crutcher	R. S. Turner	R. D. Bay
L. A. Will	E. Phillips	W. C. Schweer	Files

L. WILL
R. UHRIG

CONTRACT WTC-221.00
WORLD TRADE CENTER
THE PORT OF NEW YORK AUTHORITY
LACLEDE CONTRACT 67-J-31801

Attached find the following drawings:

Drawing No.	Title	Date
F3-r-302	Special Angle Types 15, 16 & 17	R2-24-68
F3-r-305	Special Angle Type 30	R2-24-68
F3-r-307	Steel Truss Bar Sections	2-24-68
F3-r-308	Laclede Angles - Unequal Legs Properties for Designing	1-24-68

Please destroy the superceded standards previously distributed and listed below:

Drawing No.	Title	Date
F3-r-302	Special Angle Types 15, 16 & 17	R1-15-68
F3-r-305	Special Angle Type 30	R1-15-68

These two drawings were distributed with Memorandum #4 dated January 16, 1968.

The following changes have been made on the drawings:

F3-r-302 was changed to show a new angle type 17 which is a 2" x 1-1/2" x .370 Angle.
F3-4-305 was revised to change the tolerance shown on the 3" leg.

Drawing F3-r-307 covers all the Plain Round Bars that will be required on the project. Please note the 1-13/16" Plain Round Bar which has not been previously discussed. Will there be any problem rolling this bar if commercial tolerances and straightness are not important?

Drawing F3-4-308 shows the design properties of all bulb-legged angles used on the project.

2002-NOV-20

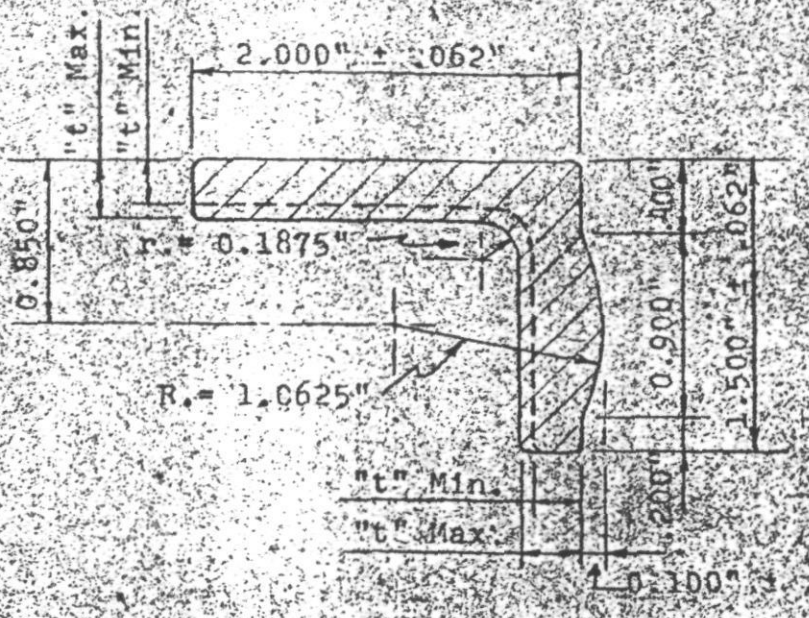

HOT ROLLED BULB ANGLE

Designation	Angle Size (Inches)	Thickness "t" (Inches)	Weight (Lbs/Ft)	Area (Sq. Ins.)
15	2 x 1½	.250 ± .012	2.99	0.881
16	2 x 1½	.310 ± .012	3.59	1.057
17	2 x 1½	.370 ± .012	4.17	1.226

SPECIFICATIONS

Tolerance - 2-1/2% by weight
Grade - A-242 50,000 psi minimum yield strength
Chemistry - Carbon .22 Maximum
Manganese 1.00 Maximum
Squareness of Legs - 90° ±1-1/2°

LACLEDE STEEL COMPANY	CLASS Standards	DATE 2-24-68
SUBJECT Bulb Angle Sections (16, 17)		

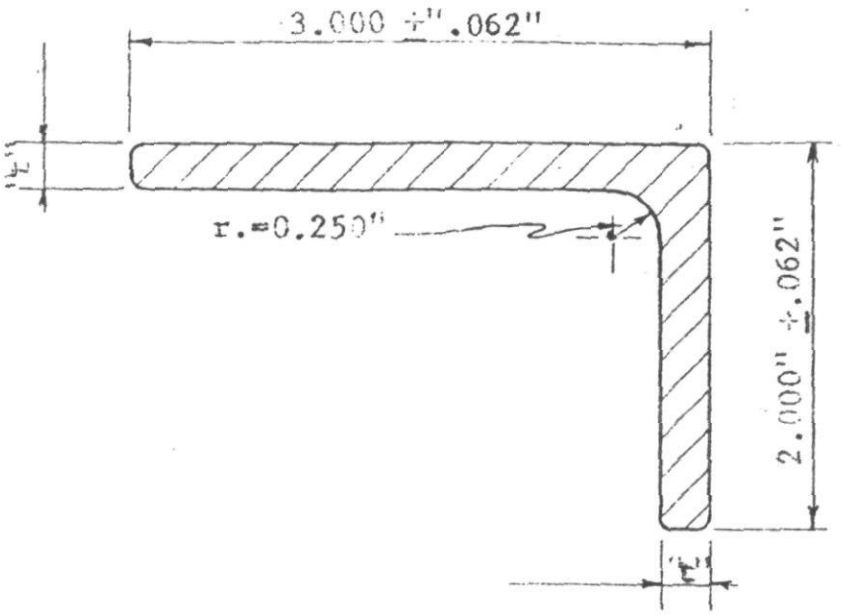

HOT ROLLED PLAIN ANGLE

Designation	Angle Size (Inches)	Thickness "t" (Inches)	Weight (Lbs/Ft)	Area (Sq. Ins.)
30	3 x 2	.250 ±.012	4.1	1.19

SPECIFICATIONS

Tolerance - 2-1/2% by weight
Grade - A-242 50,000 psi minimum yield strength

Chemistry - Carbon .22 Maximum
Manganese 1.00 Maximum
Squareness of Legs - 90° ±1-1/2°

LACLEDE STEEL COMPANY ST. LOUIS, MISSOURI	CLASS: Standards Steel Truss	DATE 1-5-68
		REV. 1-15-68
Steel Truss Angle Section		FILE 2-24-68
(Special Angle Type 30)		
ENGINEERING DEPARTMENT JRP APPROVED RDB		DRAWING F3-r-305

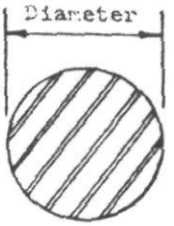

PLAIN ROUND BAR MILL ROLLED				
Diameter (Inches)	Grade	Area (Sq.Ins.)	Weight (Lbs/Ft.)	Tolerance (Inches)
0.75	A242	.[illegible]2	1.50	±0.008
[illegible].92	A242	.[illegible]65	2.26	±0.009
[illegible].[illegible]	A242	.[illegible]54	2.56	±0.009
1.[illegible]9	A36	.[illegible]33	3.17	±0.010
1.[illegible]	A242	1.[illegible]21	3.47	±0.011
1-13/16	A36	2.[illegible]20	8.77	±1/64

SPECIFICATIONS

Grade - [illegible]242

Minimum Yield Strength - 50,000 PSI

Chemistry: Carbon 22 Maximum
Manganese 100 Maximum

Grade - A36

Minimum Yield Strength - 36,000 PSI

Chemistry: Carbon 28 Maximum
Manganese 60 Maximum

LACLEDE STEEL COMPANY ST. LOUIS, MISSOURI	CLASS: Standards Steel Truss	DATE 2-24-68
Steel Truss Bar Sections		REV.
		FILE
ENGINEERING DEPARTMENT JRP APPROVED RDB		DRAWING F3-r-307

LACLEDE STEEL COMPANY
ST. LOUIS, MISSOURI

CLASS: Standards

Steel Truss

Laclede Angles - Unequal Legs

Properties for Designing

ENGINEERING DEPARTMENT JLP APPROVED RDB

DATE 1-24-68

REV.

FILE

DRAWING F3-r-302

HOT ROLLED

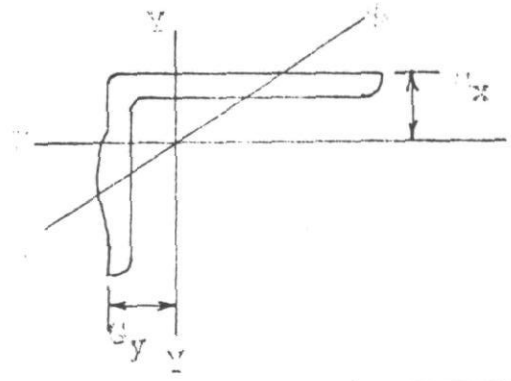

LACLEDE
ANGLES
UNEQUAL LEGS
PROPERTIES FOR DESIGNING

Note: Refer to sketch for axes orientation
See Drawings F3-r-302 and F3-r-303
for angle details

SIZE	THICK-NESS	WEIGHT PER FOOT	AREA	AXIS X-X				AXIS Y-Y				AXIS Z-Z	
				I	S	r	G_x	I	S	r	G_y	[illegible]	[illegible]
in	in	lb	in^2	in^4	in^3	in	in	in^4	in^3	in	in	in^3	in
2 x 1½	.25	2.992	.880	.16	.16	.43	.44	.34	.25	.63	.61	[illegible]	[illegible]
2 x 1½	.31	3.592	1.057	.19	.18	.43	.46	.40	.30	.62	[illegible]	.10	[illegible]
2 x 1½ No	.35	3.978	1.170	.21	.20	.42	.47	.44	.33	.62	.66	.11	.31
2 x 1½	.37	4.167	1.226	.21	.21	.41	.48	.46	.35	.61	.68	.12	.31
3 x 2 No	.25	4.470	1.315	.45	.31	.59	[illegible]	1.21	.57	.96	[illegible]	.23	.42
3 x 2	.33	5.672	1.660	.54	.38	.57	.57	1.51	.73	.95	[illegible]	.30	.42
3 x 2	.37	6.257	[illegible]	.59	.41	.57	.58	1.65	.81	.95	.97	.33	.42

WTCI-29-I

MEMORANDUM NO. 11

February 28, 1968

P. B. Akin	W. Kunes	J. Jackson	L. Hazelip
R. W. Richards	F. Hacke	E. G. Johnson	R. Wedler
H. R. Kilpatrick	J. Guyer (2)	T. Collins	G. Vaughan
R. B. Dennis	J. Korilko	E. Jaschek	H. Kamper
A. C. Weber	A. H. Becker	J. McCammon	J. Paul
E. L. Bockstruck	H. Meyer	W. Davis	L. Troeckler
W. A. Peters	M. Hardaway	R. Uhrig (2)	R. Meckfessel
H. E. Hillmer	C. Crutcher	R. S. Turner	R. D. Bay
L. A. Will	E. Phillips	W. C. Schweer	Files

L. WILL
R. UHRIG

CONTRACT WTC-221.00
WORLD TRADE CENTER
THE PORT OF NEW YORK AUTHORITY
LACLEDE CONTRACT 67-J-31801

Attached find the following drawings:

Drawing No.	Title	Date
F3-r-302	Special Angle Types 15, 16 & 17	R2-24-68
F3-r-305	Special Angle Type 30	R2-24-68
F3-r-307	Steel Truss Bar Sections	2-24-68
F3-r-308	Laclede Angles - Unequal Legs Properties for Designing	1-24-68

Please destroy the superceded standards previously distributed and listed below:

Drawing No.	Title	Date
F3-r-302	Special Angle Types 15, 16 & 17	R1-15-68
F3-r-305	Special Angle Type 30	R1-15-68

These two drawings were distributed with Memorandum #4 dated January 16, 1968.

The following changes have been made on the drawings:

F3-r-302 was changed to show a new angle type 17 which is a 2" x 1-1/2" x .370 Angle.
F3-4-305 was revised to change the tolerance shown on the 3" leg.

Drawing F3-r-307 covers all the Plain Round Bars that will be required on the project. Please note the 1-13/16" Plain Round Bar which has not been previously discussed. Will there be any problem rolling this bar if commercial tolerances and straightness are not important?

Drawing F3-4-308 shows the design properties of ~~all~~ bulb-legged angles used on the project.

Richard D. Bay

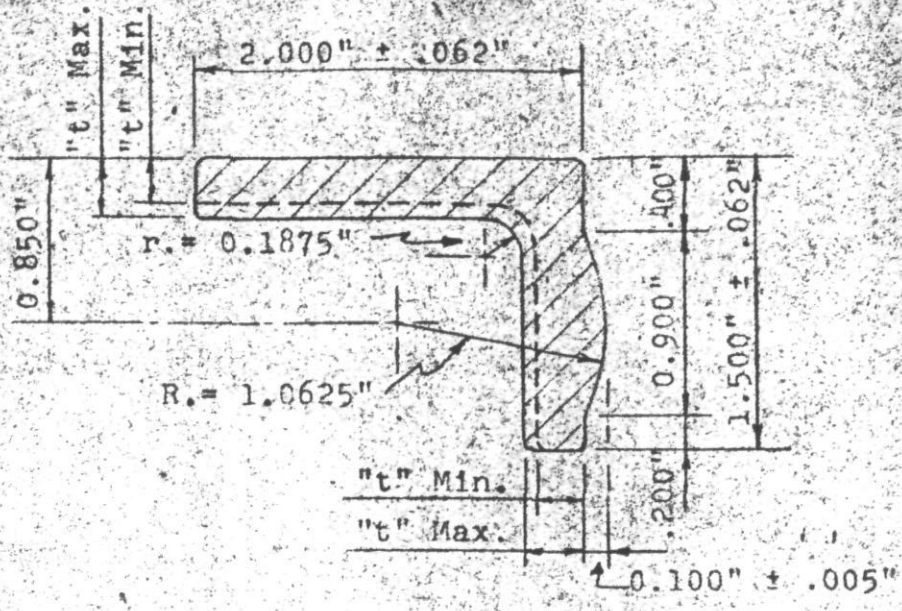

HOT ROLLED BULB ANGLE

Designation	Angle Size (Inches)	Thickness "t" (Inches)	Weight (Lbs/Ft)	Area (Sq.Ins.)
15	2 x 1½	.250 ± .012	2.99	0.881
16	2 x 1½	.310 ± .012	3.59	1.057
17	**2 x 1½**	**.370 ± .012**	**4.17**	**1.226**

SPECIFICATIONS

Tolerance - 2-1/2% by weight
Grade - A-242 50,000 psi minimum yield strength

Chemistry - Carbon .22 Maximum
Manganese 1.00 Maximum
Squareness of Legs - 90° ±1-1/2°

LACLEDE STEEL COMPANY ST. LOUIS, MISSOURI	CLASS: Standards — Steel Truss	DATE 3-1-67
Steel Truss Angle Sections		REV. 1-15-68
(Special Angles Type 15, 16, 17)		FILE 2-24-68
ENGINEERING DEPARTMENT J.R.P. APPROVED R.D.B.		DRAWING E3-r-302

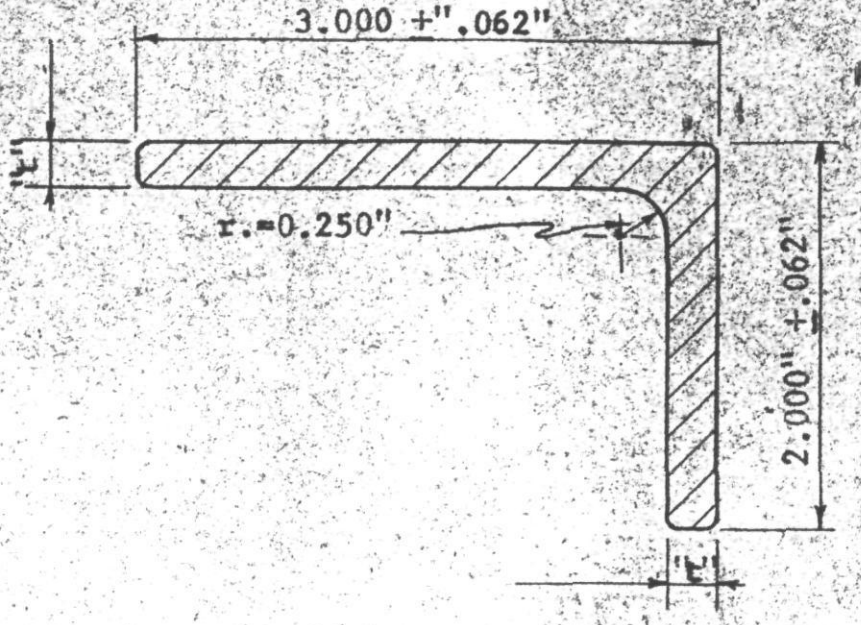

HOT ROLLED PLAIN ANGLE

Designation	Angle Size (Inches)	Thickness "t" (Inches)	Weight (Lbs/Ft)	Area (Sq. Ins.)
30	3 x 2	.250 ±.012	4.1	1.19

SPECIFICATIONS

Tolerance - 2-1/2% by weight
Grade - A-242 50,000 psi minimum yield strength

Chemistry - Carbon .22 Maximum
Manganese 1.00 Maximum
Squareness of Legs - 90° ±1-1/2°

LACLEDE STEEL COMPANY ST. LOUIS, MISSOURI	CLASS: Standards Steel Truss	DATE 1-5-68
Steel Truss Angle Section		REV. 1-15-68
(Special Angle Type 30)		FILE 2-24-68
ENGINEERING DEPARTMENT JRP	APPROVED RDB	DRAWING F3-r-305

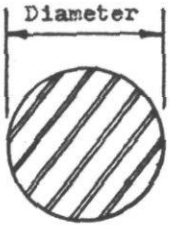

PLAIN ROUND BAR PROPERTIES				
Diameter (Inches)	Grade	Area (Sq.Ins.)	Weight (Lbs/Ft.)	Tolerance (Inches)
0.75	A242	.442	1.50	±0.008
0.92	A242	.665	2.26	±0.009
0.98	A242	.754	2.56	±0.009
1.09	A36	.933	3.17	±0.010
1.14	A242	1.021	3.47	±0.011
1-13/16	A36	2.580	8.77	±1/64

SPECIFICATIONS

Grade - A242
Minimum Yield Strength - 50,000 PSI
Chemistry: Carbon 22 Maximum
Manganese 100 Maximum

Grade - A36
Minimum Yield Strength - 36,000 PSI
Chemistry: Carbon 28 Maximum
Manganese 60 Maximum

LACLEDE STEEL COMPANY ST. LOUIS, MISSOURI	CLASS: Standards Steel Truss	DATE 2-24-68
Steel Truss Bar Sections		REV.
		FILE
ENGINEERING DEPARTMENT JRP APPROVED RDB		DRAWING F3-r-307

LACLEDE STEEL COMPANY
ST. LOUIS, MISSOURI

CLASS: Standards / Steel Truss

Laclede Angles - Unequal Legs

Properties for Designing

ENGINEERING DEPARTMENT JRP APPROVED RDB

DRAWING F3-r-308 DATE 1-24-68 REV. FILE

LACLEDE ANGLES UNEQUAL LEGS PROPERTIES FOR DESIGNING

HOT ROLLED

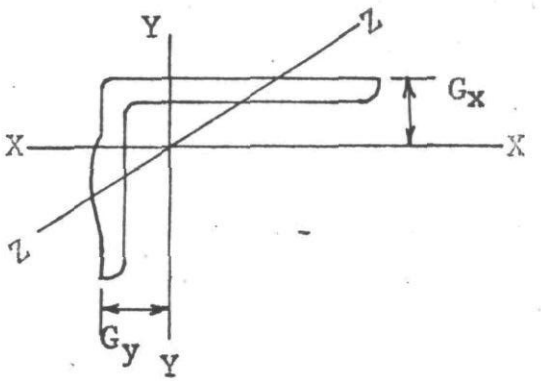

Note: Refer to sketch for axes orientation
See Drawings F3-r-302 and F3-r-303 for angle details

SIZE	THICK-NESS	WEIGHT PER FOOT	AREA	AXIS X-X				AXIS Y-Y				AXIS Z-Z	
				I	S	r	G_x	I	S	r	G_y	I	r
in	in	lb	in^2	in^4	in^3	in	in	in^4	in^3	in	in	in^4	in
2 x 1½	.25	2.992	.880	.16	.16	.43	.44	.34	.25	.63	.61	.09	.31
2 x 1½	.31	3.592	1.057	.19	.18	.43	.46	.40	.30	.62	.64	.10	.31
2 x 1½	.35	3.978	1.170	.21	.20	.42	.47	.44	.33	.62	.66	.11	.31
2 x 1½	.37	4.167	1.226	.21	.21	.41	.48	.46	.35	.61	.68	.12	.31
3 x 2	.25	4.470	1.315	.45	.31	.59	.55	1.21	.57	.96	.90	.23	.42
3 x 2	.33	5.672	1.668	.54	.38	.57	.57	1.51	.73	.95	.94	.30	.42
3 x 2	.37	6.257	1.840	.59	.41	.57	.58	1.65	.81	.95	.97	.33	.42